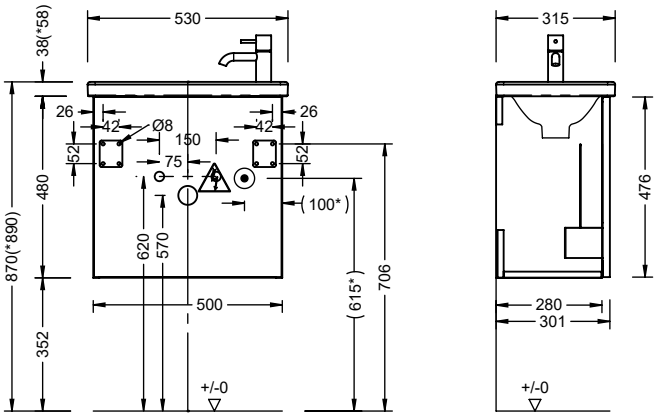

SFPF053

(*) SFPQ053