JEE-O slimline mirror 18

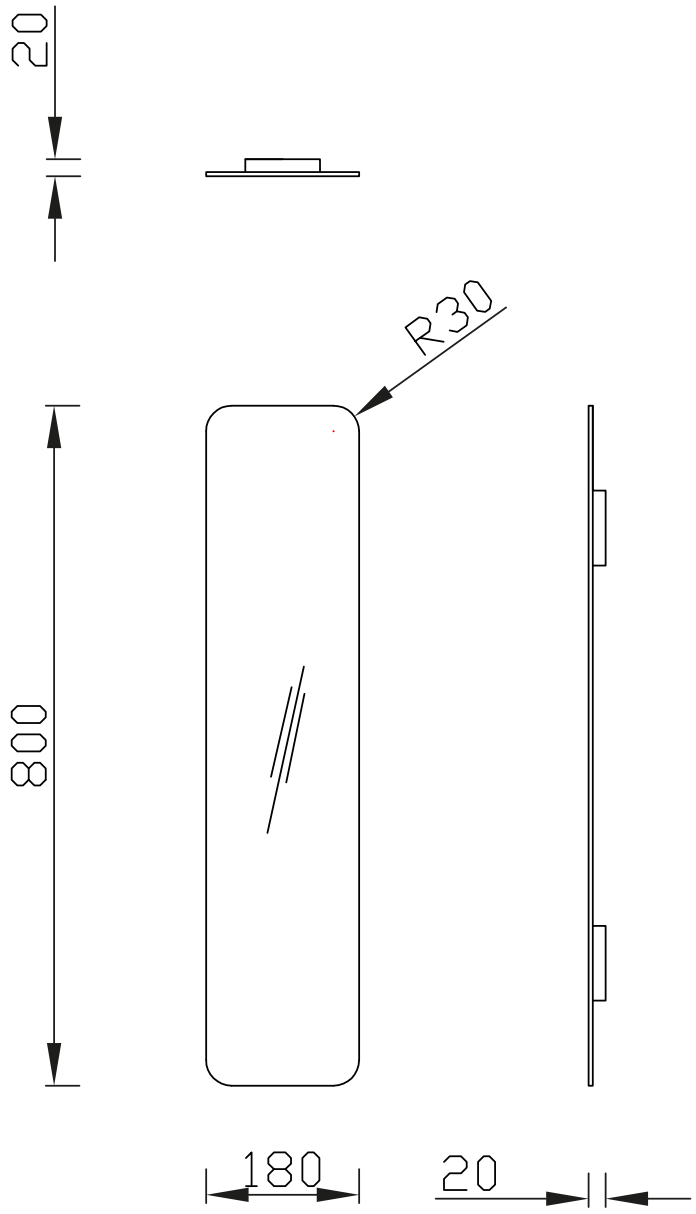



Article code:	801-0117
Material:	Copper-free and lead-free mirror glass and aluminium frame.
Cleaning instructions:	soft cloth, non abresive glass cleaner

Dimension package:	L85 x W25 x H10 cm
Total weight:	3,2 kg
Package weight:	1,0 kg

1 year warranty – The general conditions can be found on our website: www.jee-o.com/downloads

HS code:	70099100
Approvals:	UL certified

CE

Models are subject to change and specs may contain typographical errors
Slight variations in the aesthetic appearance of the product, including the color, may occur after exposure to external influences such as sunlight, pollution or harmful chemicals

JEE-O slimline wall cold water tap

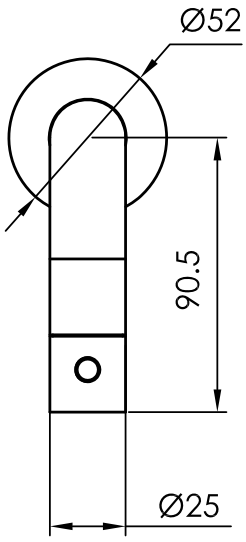

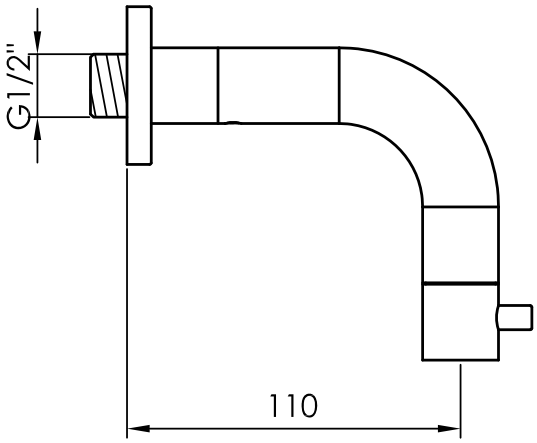





Article code:	800-3730 Brushed 800-3733 Stuctured black 800-3734 PVD coated bronze 800-3735 PVD coated matt gold 800-3739 PVD coated dark steel	Connection: Thread:	G ½" (ø15mm / 0.6") British Standard Pipe (BSP)
		Dimension package: Total weight: Package weight:	L28 x W34 x H13 cm 0,49 kg 0,07 kg
		7 year warranty – The general conditions can be found on our website: www.jee-o.com/downloads	
		HS code:	84818011900
Material:	Stainless Steel r304		
Cleaning instructions:	download JEE-O shower and taps manual on our website: www.jee-o.com		
Cartridge:	Available soon		
Flow at cold water:	Available soon		
Pressure:	Recommended working pressure 3Bar		

Models are subject to change and specs may contain typographical errors
Slight variations in the aesthetic appearance of the product, including the color, may occur after exposure to external influences such as sunlight, pollution or harmful chemicals

JEE-O flow basin small

made from DADO® quartz

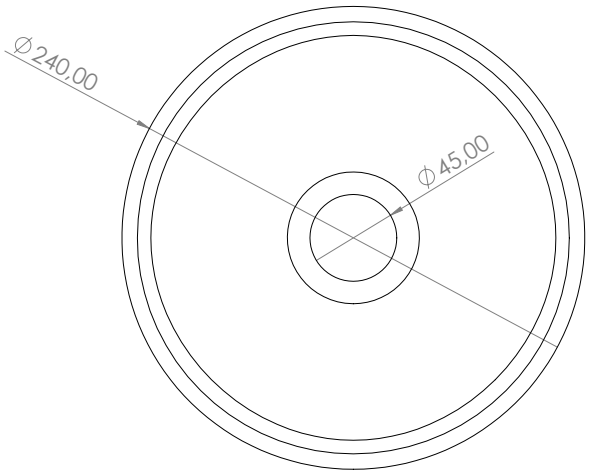

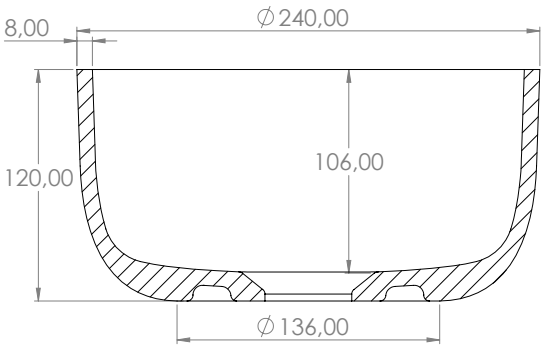



Article code:	SWMBAS119 White DADOquartz
Material:	DADOquartz - Scratch & abrasion resistant
Waste diameter:	45mm

Dimensions:	L 24 x W 24 x H 12 cm
Basin rim:	1 cm
Net weight:	2kg

Note: cast products are subject to size variation of +/-5%

Dimension package:	L 36 x W 27 x H 15 mm
Package weight:	0,7kg
UV stability:	6 / BSEN438

25 year warranty – The general conditions can be found on our website: www.jee-o.com/downloads

HS code: 68109900

CE

Models are subject to change and specs may contain typographical errors
Slight variations in the aesthetic appearance of the product, including the color, may occur after exposure to external influences such as sunlight, pollution or harmful chemicals

JEE-O base for basin left

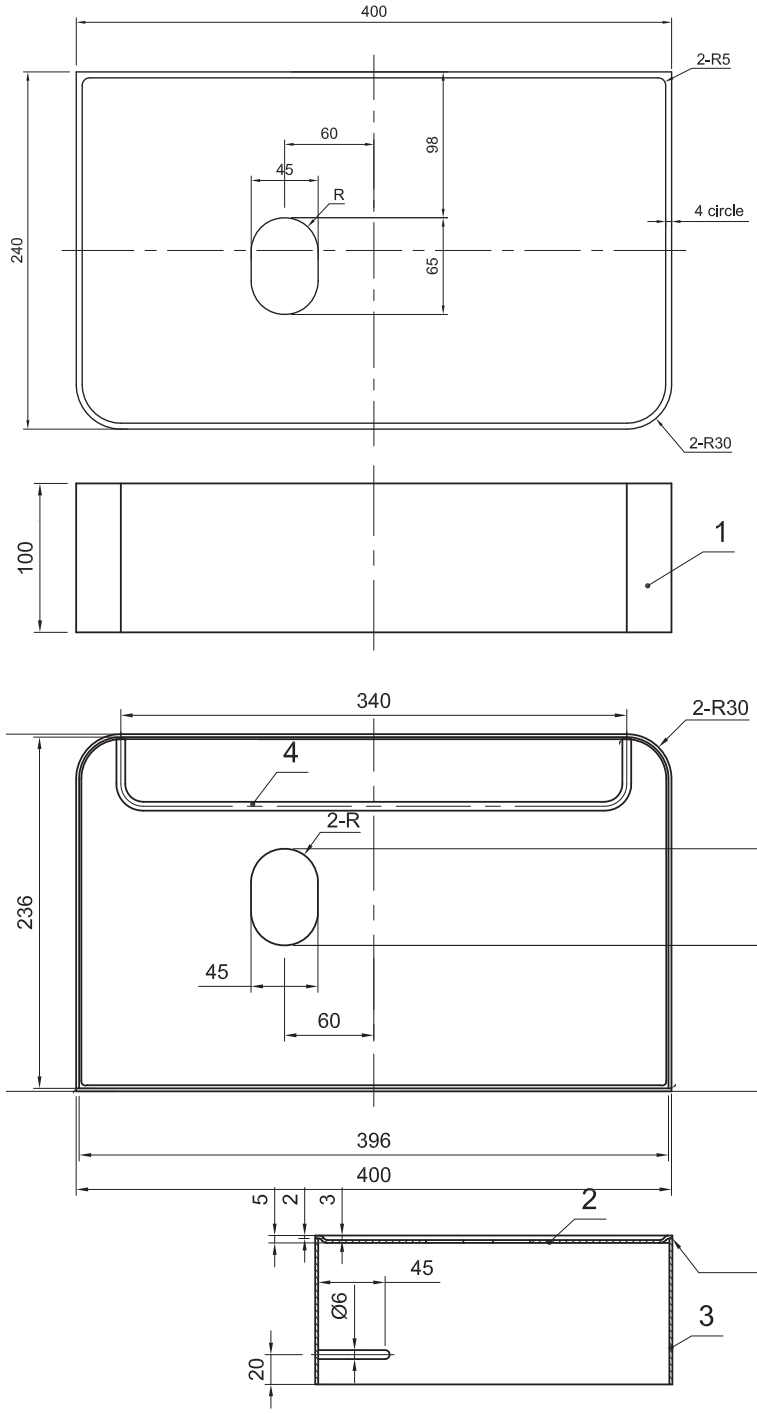





Article code:	002-1107 White 002-1103 Black
Material:	Stainless Steel r304
Cleaning instructions:	download JEE-O shower and taps manual on our website: www.jee-o.com

Dimension package:	L 32 x W 47 x H 16 cm
Total weight:	3.8 kg
Package weight:	0.75 kg

2 year warranty – The general conditions can be found on our website: www.jee-o.com/downloads

HS code: 73249000

Models are subject to change and specs may contain typographical errors
Slight variations in the aesthetic appearance of the product, including the color, may occur after exposure to external influences such as sunlight, pollution or harmful chemicals

JEE-O basin plug (not lockable)

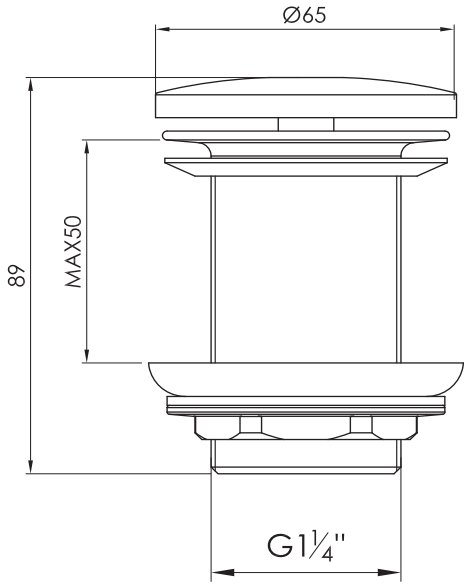





Article code:	001-0010 Brushed 001-0011 Polished 001-0013 Structured black 001-0014 PVD coated bronze 001-0015 PVD coated gold matt 001-0016 PVD coated gun metal 001-0017 White
Material:	Stainless Steel r304
Cleaning instructions:	download JEE-O shower and taps manual on our website: www.jee-o.com

Cleaning:	JEE-O protect
Connection:	G 1 ¼"
Dimension package:	L 10 x W 7 x H 7 cm
Total weight:	0.3 kg
Package weight:	0.02 kg

7 year warranty – The general conditions can be found on our website: www.jee-o.com/downloads

HS code: 84818011900

Models are subject to change and specs may contain typographical errors
Slight variations in the aesthetic appearance of the product, including the color, may occur after exposure to external influences such as sunlight, pollution or harmful chemicals

JEE-O siphon compact

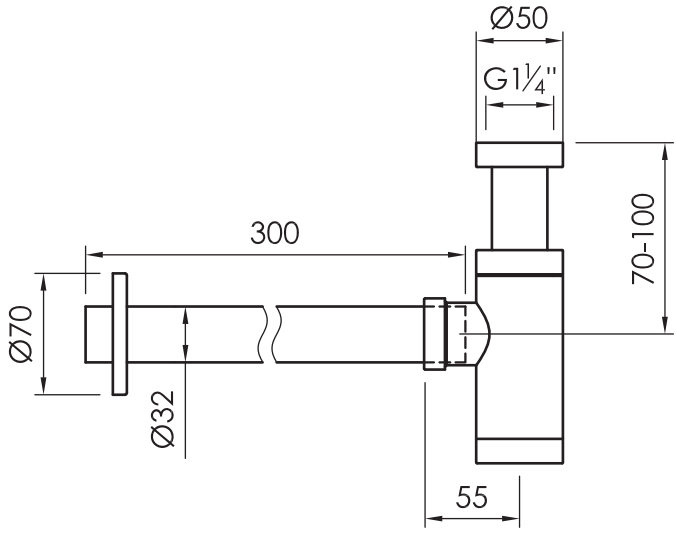



Article code:	001-0120 Brushed 001-0123 Structured black 001-0124 Bronze 001-0125 Matt gold
Material:	Stainless steel
Cleaning instructions:	download JEE-O shower and taps manual on our website: www.jee-o.com

Connection:	G 1 ¼" (ø42mm / 1.6")
Dimension package:	L 27,5 x W 23 x H 6,5 cm
Total weight:	1,20 kg
Package weight:	0,27 kg

7 year warranty – The general conditions can be found on our website: www.jee-o.com/downloads

HS code: 84818011900

Models are subject to change and specs may contain typographical errors
Slight variations in the aesthetic appearance of the product, including the color, may occur after exposure to external influences such as sunlight, pollution or harmful chemicals